SCON SB017 - SB020 CONNECTIONS

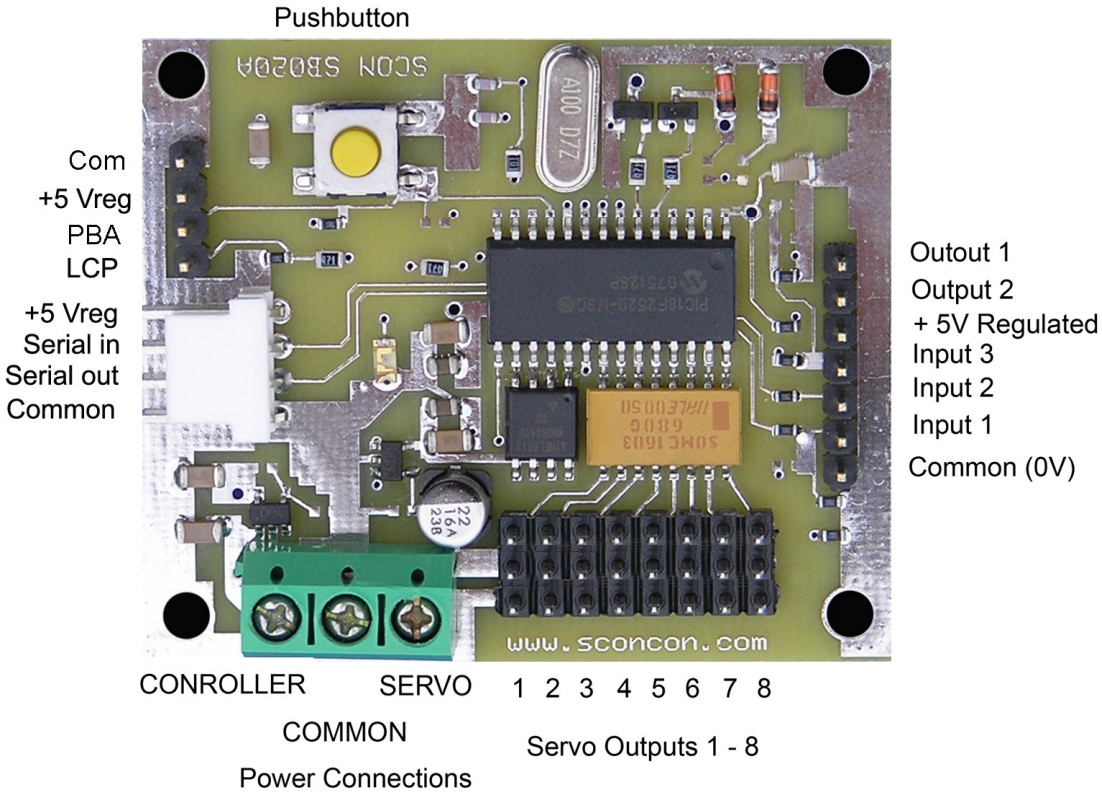

Note: SB020S version shown; SB020M includes servo outputs only.

Recommended controller power is 5.5 - 12 Volts DC

Servo Power as required, may be connected to controller power if power source is appropriate.

LCP is the same as Flex I/O on USB devices however LCP has a series resistor.

PBA (Pushbutton Access). Connect to common is equivalent to pressing button.

Output 1 and Output 2 are open collector drivers. Consult the manual for additional information.

Inputs 1 – 3 are buffered inputs. Load resistance is 10K ohms to Common.

+5 Volt Regulated power on the I/O connector is limited to 100MA